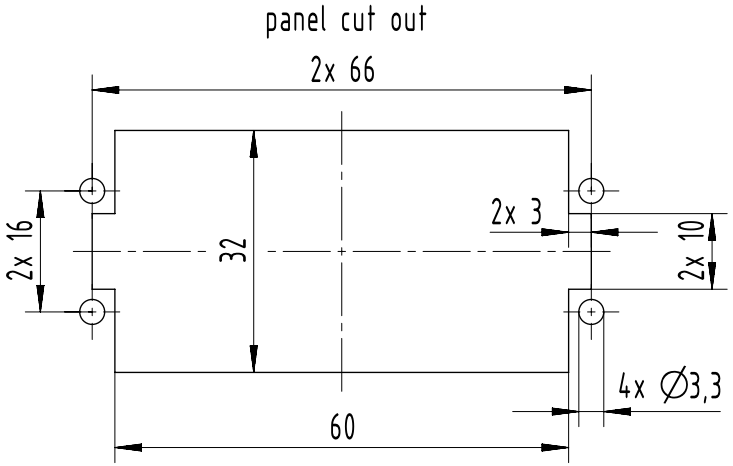

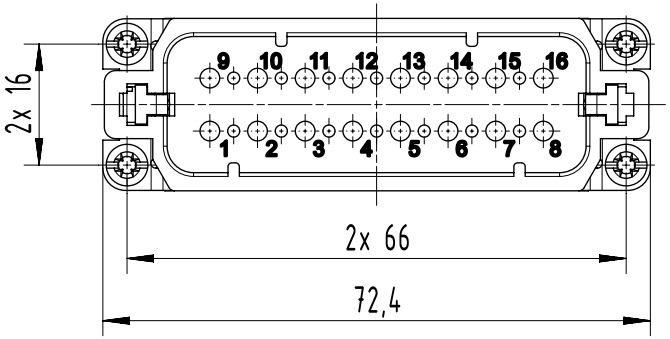

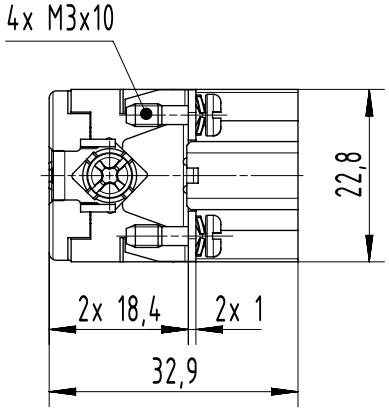

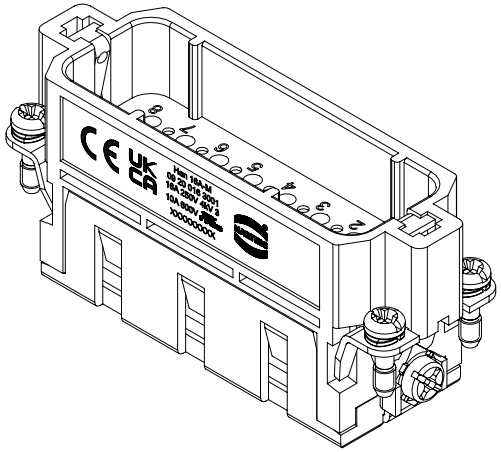

All Dimensions in mm Original Size DIN A4	Scale 1:1	Free size tol.		Ref. Sub.	
All rights reserved Department EL PD	Created by balsan	Inspected by balsan	Standardisation	Date 25-Apr-2025	State 40 - Released
	Title Han 16A-M-c				Doc-Key / ECM-Nr. DS00179443
HARTING D-32339 Espelkamp	Type TB	Design Number DS00179443	SAP Mat. Number 09200163001	Rev. F	Page 1/1

A4