panel mounting socket outlet, angled - flange 85x85, fixing centers 70x70

Product description	
BALS-Prd.-Nr	12084
EAN	4024941120845
Product category	Panel mounting socket outlet, angled
Current	16A
Number of poles	5p
Arangement of phases	3p+N+PE
Position of earth contact	6 h
Voltage	200/346 - 240/415V~

CEE-Norm UK Ltd. Unit 2, Highbridge Court, Stafford Park 1, TF3 3BD Telford UK
phone: +44 1952 212700 / fax: +44 1952 212711 / email: sales@ceenorm.co.uk

Product description	
Frequency	50/60Hz
Protection degree	IP67
Colour code	red RAL 3000
Colour of appliance	Hinged lid red RAL 3000, Bayonet ring grey RAL 7035, Enclosure grey RAL 7035
Connection design	with screw terminal
Maximum conductor size	4,0 qmm
Cable entry	other
Height	96mm
Width	86mm
Depth	89mm
Flange size vertical in mm	85mm
Flange size horizontal in mm	85mm
Drill hole dist. vertical mm	70mm
Drill hole dist. horizontal mm	70mm
Material of enclosure	Polyamide
Contacts	The contact carrier is made of polyamide, The contacts are brass

Additional technical properties	
	The inclination is 20°

Logistics data	
Weight/pcs	0.204 kg / Piece
Packaging	Bag
Content amount	1 ST
EAN	4024941120845
Length	89 mm
Width	86 mm
Height	96 mm
Weight	0.205 kg
Volume	734.784 ccm
Packaging	Carton
Content amount	10 ST
EAN	4024941820394
Length	245 mm
Width	177 mm
Height	185 mm
Weight	2.173 kg
Volume	7,140 ccm

CEE-Norm UK Ltd. Unit 2, Highbridge Court, Stafford Park 1, TF3 3BD Telford UK
phone: +44 1952 212700 / fax: +44 1952 212711 / email: sales@ceenorm.co.uk

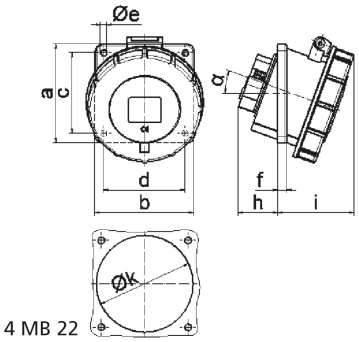

4 MB 22

Ampere Polzahl	16 3	16 4	16 5	32 3	32 4	32 5
a	85,0	85,0	85,0	85,0	85,0	85,0
b	85,0	85,0	85,0	85,0	85,0	85,0
c	70,0	70,0	70,0	70,0	70,0	70,0
d	70,0	70,0	70,0	70,0	70,0	70,0
e ø	5,5	5,5	5,5	5,5	5,5	5,5
f	8,0	8,0	8,0	8,0	8,0	8,0
h	30,0	30,0	30,0	50,0	50,0	34,0
i	55,0	57,0	59,0	67,0	67,0	69,0
k	57,0	65,0	70,0	78,0	78,0	78,0
l	57,0	65,0	70,0	78,0	78,0	78,0
α	20°	20°	20°	20°	20°	20°
Leiter mm² min	1,5	1,5	1,5	2,5	2,5	2,5
Leiter mm² max	4	4	4	10	10	10

CEE-Norm UK Ltd. Unit 2, Highbridge Court, Stafford Park 1, TF3 3BD Telford UK
phone: +44 1952 212700 / fax: +44 1952 212711 / email: sales@ceenorm.co.uk